LYTLE

Double Limits

Mathematics and Physics

B. S.

1901

D O U B L E L I M I T S

by

Ernest B. Lytle.

Thesis

presented for the degree of

BACHELOR OF SCIENCE

in

Mathematics and Physics.

University of Illinois.

June 1901.

UNIVERSITY OF ILLINOIS

May 30 1901

THIS IS TO CERTIFY THAT THE THESIS PREPARED UNDER MY SUPERVISION BY

Mr. Ernest B Lytle.

ENTITLED Double Limits

IS APPROVED BY ME AS FULFILLING THIS PART OF THE REQUIREMENTS FOR THE DEGREE

OF Bachelor of Science (Math. and Physics)

J. W. Shattuck

HEAD OF DEPARTMENT OF Mathematics.

Table of Contents.

Chapter I.

Preliminary Ideas and Definitions.

Chapter II.

Properties of Double Limits.

Chapter III.

Methods of Testing the Existance of Double Limits.

Chapter IV.

Chapter I.

Preliminary Notions and Definitions.

1. We will use Dirichlet's definition of a function which is as follows: [See Harkness and Morley's Theory of Functions p. 53.] "Let x take certain values in an interval (x_0 to x_1); if y possess a definite value or definite values for each of these, y is said to be a function of x."

We see that this definition does not require that y be related to x by any law or arithmetic expression. There are functions which cannot be given mathematical expression, such for example as Peano's problem. The failure to cover such cases is the weakness of the definition of function usually given. The above

definition also has the advantage of covering such cases where x is defined for only certain values within the interval (x_0 to x_1); as when x is defined only for all rational numbers of the interval.

In this discussion we shall have under consideration functions of two real variables. Such a function, as $z = f(x, y)$, is completely defined when for every pair of values (x', y') which comes into consideration, there always exists a definite value of z. We shall restrict ourselves here to functions which are single valued; i. e. for every pair of values (x', y') there exists but a single value of z.

2. There may be two different kinds of variations of such functions of two variables; either we may consider one variable as constant and let the other vary by itself, or we may let both variables vary simultaneously.

These two methods of variation give rise to two kinds of limits. If one variable, say y, be considered as constant, while x is made to approach the value a, then we say the single limit $\underset{x \doteq a}{L} f(x, b)$ exists and is equal to A, if for every arbitrarily small positive number σ there exists another positive number ϵ such that for every $|\delta| < \epsilon$ we have the relation

$$|f(a+\delta, b) - A| < \sigma$$

fulfilled.

The existance of this kind of a limit means geometrically that there is in the xz-plane around the point A a rectangle of 2σ in width, and 2δ in length, the δ depending upon the selection of the arbitrary σ and upon the point $x = a$, such that as x approaches the value a,

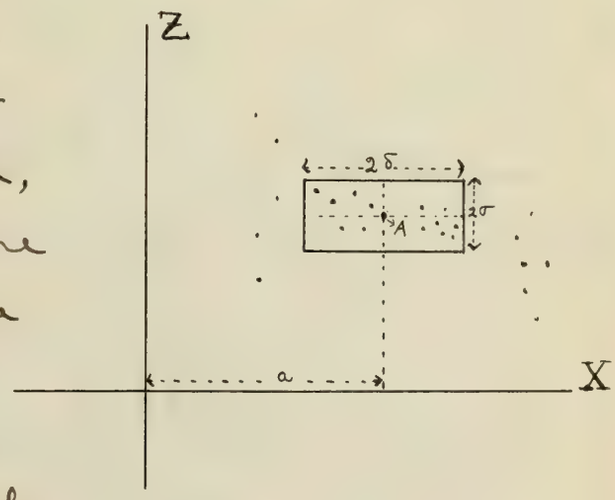

for every x between $a-\delta$ and $a+\delta$ the value of the function lies between $A+\sigma$ and $A-\sigma$ however small we choose the δ.

When x approaches the value a and y approaches the value b simultaneously, we get our second kind of limit which we will call a double limit and represent it by the symbol $\underset{\substack{x=a \\ y=b}}{L} f(x,y)$.

We say that the double limit exists and is equal to A, when for every arbitrarily small positive number σ, there may be determined another positive number ϵ such that the relation

$$|f(a+\delta_1, b+\delta_2) - A| < \sigma \qquad (1.)$$

is true for every pair of values (δ_1, δ_2) where δ_1 and δ_2 are independent of one another and where furthermore

$$|\delta_1| \leqq \epsilon \quad , \quad |\delta_2| \leqq \epsilon .$$

The existance of the double limit means geometrically that there is around the point A

a parallelopiped 2σ by $2\delta_1$ by $2\delta_2$ in dimensions such that when

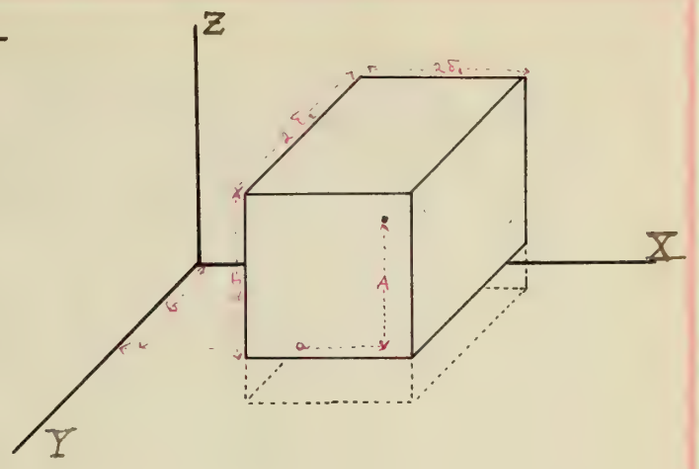

$$a - \delta_1 \leqq x \leqq a + \delta_1$$
$$b - \delta_2 \leqq y \leqq b + \delta_2$$

the value of the function (Z) is always

$$A - \sigma \leqq Z \leqq A + \sigma$$

however small we may choose the σ. Both δ_1 and δ_2 depend upon the values σ, a, and b.

The double limit may also be interpreted as follows:- If σ be any arbitrarily small positive number and if ϵ be any other positive number whose value depends upon σ and A, then the existance of the double limit means that there is around the point A a right circular cylinder, whose length is 2σ and whose base has a radius δ such that the value of the function always lies within this cylinder for every $|\delta| < \epsilon$, i.e. the value of the function is always

$$(A-\sigma) \leqq z \leqq (A+\sigma)$$

Example 1. Given the function

$$z = y \sin x.$$

Here we have

$$\underset{\substack{x=0\\y=0}}{L}\, y \sin x = A = 0$$

for, however small we choose the σ, we can always find an ϵ such that for

$$|\delta_1| \leqq \epsilon \quad , \quad |\delta_2| \leqq \epsilon$$

we have the relation

$$|\delta_2 \sin \delta_1| < \sigma$$

fulfilled.

The A which we have defined as the value of the double limit must always be a definite, finite number. Its value depends not upon the value of the function at the limiting point (a,b) but depends only upon the values of the function in the neighborhood of the limiting point (a,b). If at the point (a,b) the double limit exists, its value need not be equal to the value of the function for $x=a$, $y=b$, i.e. $f(a,b)$; in fact

the function may not even exist at the point (a, b) at all.

Example 2. Given the function

$$z = x^2 + y^2 \quad , \text{ where } f(0,0) = 1$$

When we define the function for $x=0, y=0$ as equal to one, we have

$$\underset{\substack{x=0\\y=0}}{L} (x^2+y^2) = 0 \neq f(0,0) = 1$$

i.e. the double limit exists but is not equal to the value of the function at the point $(0, 0)$. Or if we consider our function as not defined for $x=0, y=0$, then we have

$$\underset{\substack{x=0\\y=0}}{L} (x^2+y^2) = 0 .$$

3. If the double limit exists and is equal to the value of the function at the point (a, b), i.e. if

$$\underset{\substack{x \doteq a\\y \doteq b}}{L} f(x,y) = f(a,b)$$

then we call the point (a, b) a regular point. At such regular points the function is always continuous with respect to both variables together, continuous with re-

spect to each variable alone, and continuous by every continuous approach of x and y to such regular points. This will be made more clear in the following chapter.

If the double limit either does not exist or exists but is different from the value of the function for $x=a$, $y=b$, i.e. differs from $f(a,b)$, then we call the point an irregular point. We see at once that a function cannot be continuous with respect to both variables at irregular points.

4. At the point $x=a$, the magnitude of discontinuity, or sprung, of a function of a single variable is defined as the limit as $\delta \doteq 0$ of the difference between the upper and the lower limits of the function within the intervals $(a-\delta, a+\delta)$. In a similar way we define the sprung of a function of two variables $f(x,y)$ at the point (a,b). Let us draw around the point (a,b) a circle with radius ρ and

take the difference of the upper and the lower limits of the function within this circle. Then the limit as $\rho \doteq 0$ of this difference is the spring of the function in respect to both variables, or in other words is simply the xy-spring. It should be noticed that we take the difference between the upper and the lower limits and not the difference between the maximum and the minimum. This includes cases where there is no greatest or least values and therefore the use of upper and lower limits gives more generality than maximum and minimum would give.

At a regular point the spring is always 0, for by definition the function is always continuous at regular points, and for continuous points of a function the amount of discontinuity or spring must necessarily be 0. Since irregular points are points of discontinuity the spring at such

points must always be greater than 0.

Example 3. Given the function

$$z = \frac{xy}{x^2+y^2}, \quad \text{where } f(0,0) = 0$$

After transforming to polar coördinates by substituting $x = \rho\cos\phi$, $y = \rho\sin\phi$, we see that the function has an upper limit when $\phi = 45°$, and a lower limit when $\phi = -45°$. The sprung at point $x=0$, $y=0$, is

$$\underset{\rho \doteq 0}{L}\left\{\frac{\rho^2 \sin 45° \cdot \cos 45°}{\rho^2\cos^2 45° + \rho^2 \sin^2 45°} - \frac{-\rho^2 \cos 45° \cdot \sin 45°}{\rho^2 \cos^2 45 + \rho^2 \sin^2 45°}\right\}$$

$$= 2\sin 45° \cdot \cos 45° = \sin 90° = 1.$$

5. When the double limit exists and is equal to the value of the function at that point, i.e. when

$$\underset{\substack{x \doteq a \\ y \doteq b}}{L} f(x,y) = f(a,b)$$

then we call the function regularly convergent at the point (a,b). In such cases the point (a,b) is a regular point. We always speak of a function being regularly convergent at a point and not for an interval. We shall see later that uniform convergence refers to an interval.

6. If we pass through the surface $z = f(x,y)$ any plane parallel to either the zx-plane or the zy-plane then the curve of intersection we call an approximation curve (Annäherungscurve). For example if we intersect the surface $z = f(x,y)$ by the plane $y = y_0$ then the curve $z = f(x, y_0)$ is an approximation curve. We will give some drawings of approximation curves in the last chapter.

7. We say that a function $f(x,y)$ converges uniformly toward $f(x,y_0)$ within the interval $a \leqq x \leqq b$ if, as y approaches y_0 simultaneously for all values of x between a and b, we reach the limiting value $f(x,y_0)$. This requires more than that

$$\underset{y=y_0}{L} f(x_0,y) = f(x_0,y_0) \qquad (1.)$$

for every constant $x = x_0$ within the interval, which is only saying that $f(x_0,y)$ is continuous at the point $y = y_0$. Therefore we see that uniform convergence for the interval $a \leqq x \leqq b$ requires that, for an arbitrarily small

positive number σ and for every y_2 between $y_0+\delta$ and y_0, the relation

$$|f(x, y_2) - f(x, y_0)| < \sigma \qquad (2.)$$

be fulfilled simultaneously for all values of x. This last relation (2) includes the whole interval $a \leqq x \leqq b$ while relation (1) has to do with but a single point of the interval. The single limit (1.) means geometrically that there is a rectangle $f(x_0, y_0) \pm \sigma$ wide by $y_0+\delta$ long within which the function $f(x_0, y_2)$ must always lie, for $y_0 < y_2 \leqq y_0+\delta$, $a \leqq x_0 \leqq b$ and where σ is any arbitrarily small positive number. Thus δ is a function of σ and x. When we consider the whole interval as in (2.) then we may take our δ as having the same value for all x's of the interval, provided we first select our σ. In such cases we may consider the δ as a function of σ alone.

If we project all the approximation curves upon the plane $y = y_0$ and draw on this plane a

strip of any arbitrarily small width σ on each side of the curve $z = f(x, y_0)$, then after finding a y_2 such that the projection of $z = f(x, y_2)$ lies wholly within this strip 2σ in width, the projection of every approximation curve between $z = f(x, y_2)$ and $z = f(x, y_0)$ must lie wholly within the strip if $f(x, y)$ converges uniformly toward $f(x, y_0)$.

8. It is our purpose to confine ourselves in this discussion strictly to the theory of double limits. But it may be of interest in this connection to suggest some applications of double limits without attempting their development. The theory of double limits finds an application in such questions as:- (1) Interchange of order of integration and differentiation, (2) Integration and differentiation of infinite series term by term, (3) Differentiation under the integral sign, (4) Condition for uniform convergence.

9. In this chapter we have given some fundamental ideas and definitions. Chapter II will consist of theorms relating to the theory and properties of double limits. Chapter III will discuss methods of testing functions for the existance of double limits. The last chapter will be devoted to the discussion of special problems. There an attempt will be made to collect and discuss functions of two real variables which have any interest from the standpoint of double limits. Models of some surfaces there discussed will be constructed and drawings of some approximation curves will be made.

10. We are indebted to Prof. E. J. Townsend's Göttingen thesis, "Ueber den Begriff und die Anwendung des Doppellimes", for most of our theory of double limits, and also for several interesting functions. Paul du Bois-Reymond's article on "Theorie

der Functionen zweier Veränderlichen," in Journal für die reine und angewandte Mathematik. Vol. 70 page 10, has given us some of the functions discussed in the last chapter. The writer is responsible for the translations, the arrangement of matter, working up of details, discussion of functions and for the construction of three models of surfaces discussed. A number of functions used in this thesis are original with the writer.

Chapter II.

Properties of Double Limits.

1. In this chapter we will give the properties of double limits in the form of propositions which we will demonstrate.

Proposition I:— If the double limit $\underset{\substack{x \doteq a \\ y \doteq b}}{L} f(x, y)$ exists and is equal to A, then we must by every continuous approach of x and y to the point (a, b) obtain one and the same limiting value A; for example, if we put $y = \phi(x)$ where $\phi(x)$ at the point $x = a$ is a continuous function and for $x = a$ has the value b, then we must have the relation

$$\underset{x \doteq a}{L} f(x, \phi(x)) = A.$$

Proof:- Suppose this were not true,

then according to our definition of double limit, we could so select a function of x [$\phi(x)$] that for a sufficiently small σ and for every δ however small, we could have the relation

$$|f(a+\delta_1, \phi(a+\delta_1)) - A| > \sigma \qquad (1.)$$

But since $\phi(x)$ is continuous at the point $x=a$ and at this point has the value b, we have

$$\underset{x \doteq a}{L} \phi(x) = \phi(a) = b$$

or, what is the same thing, we have

$$\phi(a+\delta_1) = \phi(a) + \delta_2 = b + \delta_2$$

Substituting this value of $\phi(a+\delta_1)$ in (1.) we get

$$|f(a+\delta_1, b+\delta_2) - A| > \sigma$$

which is true for every pair of values (δ_1, δ_2) within a sufficiently small neighborhood of the point (a, b). But this says that A is not the value of the double limit $\underset{\substack{x \doteq a \\ y \doteq b}}{L} f(x,y)$ and leads to a contradiction of our assumed hypothesis. Therefore, our supposition that the proposition was not true is false and

our proposition is established.

In a similar way it may be shown that

$$\underset{y \doteq b}{L} f(\psi(y), y) = A$$

if

$$\underset{\substack{x \doteq a \\ y \doteq b}}{L} f(x, y) = A$$

and if $x = \psi(y)$ at the point $y = b$ is continuous and has the value a.

An important application of this proposition will be given in first section of the next chapter. This proposition shows us at once that a single valued function can have but one double limit at the same point.

2. Proposition II:- If the double limit exists and is equal to A, then

$$\underset{x \doteq a}{L} f(x, b) = \underset{y \doteq b}{L} f(a, y) = A.$$

This follows directly from proposition I, where we select our $\phi(x)$ as the constant b, or $\psi(y)$ as the constant a.

However, we must be careful

not to assume the converse; i.e. if the limits $\underset{x \doteq a}{L} f(x, \phi(x))$ and $\underset{y \doteq b}{L} f(\psi(y), y)$ both exist and are both equal to A, that the double limit $\underset{\substack{x \doteq a \\ y \doteq b}}{L} f(x, y)$ also exists. This is not true as is shown by the following example.

Example 1. Given the function

$$z = \frac{x y^3}{x^2 + y^6}, \text{ where } f(0,0) = 0.$$

Here we have for $\phi(x) = 0$, and $\psi(y) = 0$

$$\underset{x \doteq 0}{L} f(x, 0) = \underset{y \doteq 0}{L} f(0, y) = 0.$$

But if we put $x = \psi(y) = y^3$, we have

$$\underset{y \doteq 0}{L} \frac{y^6}{y^6 + y^6} = \frac{1}{2}$$

and therefore the double limit $\underset{\substack{x \doteq 0 \\ y \doteq 0}}{L} f(x, y)$ does not exist by proposition I.

3. Proposition III:- If by every continuous simultaneous approach of x and y to the point (a, b) we come to the same limiting value A, then the double limit $\underset{\substack{x \doteq a \\ y \doteq b}}{L} f(x, y)$ exists.

Proof. If this were not true then it would be possible to select some $\phi(x)$ [or $\psi(y)$], say $y = \phi'$, such

that the limit $\underset{x \doteq a}{L} f(x, \phi(x))$ would either not exist or be different from A. Then by proposition I the double limit $\underset{\substack{x \doteq a \\ y \doteq b}}{L} f(x, y)$ would not exist. Therefore our proposition is true.

4. Proposition IV:- The necessary and sufficient condition that the double limit $\underset{\substack{x \doteq a \\ y \doteq b}}{L} f(x, y)$ exist is that by every continuous approach of x and y to the point (a, b), we always obtain the same limiting value A.

This is nothing more than a combination of propositions I and III and needs no new demonstration. This property makes our idea of the double limit more definite. Still it gives us no way of testing for the existance of double limits, for it is impossible to find the limit for every continuous approach to the point (a, b) since there are an infinite number of them.

5. Proposition V:- The existance of the double limit $\underset{\substack{x \doteq a \\ y \doteq b}}{L} f(x,y)$ does not require that the limits $\underset{x \doteq a}{L} f(x, b \pm \epsilon)$ and $\underset{y \doteq b}{L} f(a \pm \delta, y)$ exist, where ϵ and δ are arbitrarily small positive numbers.

Proof. This is a negative proposition and we will demonstrate it by showing a case where the double limit does exist and still the single limit $\underset{x \doteq a}{L} f(x, b \pm \epsilon)$ does not exist. Take the function

$$z = y \sin \frac{1}{x}, \text{ where } f(0,0) = 0, \; -1 < x < +1.$$

Here we see the double limit

$$\underset{\substack{x \doteq 0 \\ y \doteq 0}}{L} f(x,y) = 0.$$

while the limit

$$\underset{x \doteq 0}{L} f(x, 0 \pm \epsilon) = \underset{x \doteq 0}{L} \epsilon \sin \frac{1}{x} = \epsilon \sin \frac{1}{0}$$

which last has no intrepretation. Therefore the limit $\underset{x \doteq 0}{L} \epsilon \sin \frac{1}{x}$ does not exist and our proposition is demonstrated.

6. Proposition VI:- The existance of the limit $\underset{x \doteq a}{L} f(x,y)$ for every constant y, and the limit $\underset{y = b}{L} f(x,y)$ for

every constant x, in the neighborhood of (a, b), does not require that the double limit $\underset{\substack{x \doteq a \\ y \doteq b}}{L} f(x,y)$ exist.

Proof. Like the preceeding proposition this is negative and we will demonstrate by means of an example. Given the function

$$z = \frac{2x+3y}{x+y}, \text{ where } f(0,0)=0.$$

Here we have

$$\text{for } y \neq 0, \ \underset{x \doteq 0}{L} \frac{2x+3y}{x+y} = 3;$$

$$\text{" } \quad y = 0, \ \underset{x \doteq 0}{L} f(x,y) = 2;$$

$$\text{" } \quad x = 0, \ \underset{y \doteq 0}{L} f(x,y) = 3;$$

$$\text{" } \quad x \neq 0, \ \underset{y \doteq 0}{L} f(x,y) = 2;$$

that is, all the single limits exist, yet, by proposition I, the double limit $\underset{\substack{x \doteq 0 \\ y \doteq 0}}{L} f(x,y)$ does not exist for

$$\underset{x \doteq 0}{L} f(x,0) \neq \underset{y \doteq 0}{L} f(0,y).$$

Therefore our proposition is true.

Another similar example is

$$z = \left(\frac{y^2}{x^2+y^2}\right)^{\frac{1}{x^2+y^2}}, \text{ where } f(0,0) = 0.$$

7. Proposition VII:- If the double limit $\underset{\substack{x \doteq a \\ y \doteq b}}{L} f(x,y)$ exists and is equal to

A, and besides, if $\underset{x \doteq a}{L} f(x,y)$ for every y and also $\underset{y \doteq b}{L} f(x,y)$ for every x in the neighborhood of the point (a, b) exists, then

$$\underset{\substack{x \doteq a \\ y \doteq b}}{L} f(x,y) = \underset{x \doteq a}{L} \underset{y \doteq b}{L} f(x,y) = \underset{y \doteq b}{L} \underset{x \doteq a}{L} f(x,y).$$

Proof. If the limit

$$\underset{x \doteq a}{L} f(x,y) = F(a,y)$$

then we have the relation

$$|F(a,y) - f(a+\delta, y)| < \sigma \qquad (1.)$$

for every y in the neighborhood of the point (a, b). Since the double limit $\underset{\substack{x \doteq a \\ y \doteq b}}{L} f(x,y)$ exists and is equal to A, we have, by the definition of double limit, the relation

$$|f(a+\delta, y) - A| < \sigma \qquad (2.)$$

for every δ and every y in the neighborhood of (a, b). By adding (1.) and (2) we get

$$|F(a,y) - A| < 2\sigma$$

or expressed in another form,

$$\underset{y \doteq b}{L} F(a,y) = A.$$

But

$$F(a,y) = \underset{x \doteq a}{L} f(x,y)$$

therefore, substituting we have

$$\underset{y \doteq b}{L}\ \underset{x \doteq a}{L}\ f(x,y) = A.$$

In a similar way we could show that

$$\underset{x \doteq a}{L}\ \underset{y \doteq b}{L}\ f(x,y) = A$$

therefore

$$\underset{x \doteq a}{L}\ \underset{y \doteq b}{L}\ f(x,y) = \underset{y \doteq b}{L}\ \underset{x \doteq a}{L}\ f(x,y) = A = \underset{\substack{x \doteq a \\ y \doteq b}}{L}\ f(x,y)$$

which proves our proposition.

This proposition does not say however that $F(a,y)$ shall be equal to $f(a,y)$. In other words, outside of the point (a,b) itself, the function $f(x,y)$ at no place need necessarily be continuous in respect to each variable alone, nor in respect to both variables.

We read the symbol $\underset{\substack{x \doteq a \\ y \doteq b}}{L}\ f(x,y)$ the double limit of $f(x,y)$ in respect to x and y; the symbol $\underset{x \doteq a}{L}\ \underset{y \doteq b}{L}\ f(x,y)$ we call the twice taken limit of $f(x,y)$ in respect first to y and then to x.

8. Proposition VIII:- If the same double limit of two functions exists, the double limit of their sum is equal to

the sum of the double limits; i.e., if

$$\underset{\substack{x=a\\y=b}}{L} f(x,y) = A \quad , \quad \text{and} \quad \underset{\substack{x=a\\y=b}}{L} \phi(x,y) = B$$

then

$$\underset{\substack{x=a\\y=b}}{L} [f(x,y) \pm \phi(x,y)] = A \pm B.$$

Proof. By our definition of double limit we have

$$f(x,y) = A + \sigma_1 \qquad (1.)$$

$$\phi(x,y) = B + \sigma_2 \qquad (2.)$$

where both σ's may be made as small as we please by taking x sufficiently near a and y sufficiently near b. Adding (1) and (2) we have

$$f(x,y) \pm \phi(x,y) = A \pm B + (\sigma_1 \pm \sigma_2).$$

As $x \doteq a$ and $y \doteq b$ simultaneously the quantity $(\sigma_1 \pm \sigma_2)$ approaches zero. Therefore

$$\underset{\substack{x\doteq a\\y\doteq b}}{L} [f(x,y) \pm \phi(x,y)] = A \pm B = \underset{\substack{x\doteq a\\y\doteq b}}{L} f(x,y) \pm \underset{\substack{x\doteq a\\y\doteq b}}{L} \phi(x,y).$$

This holds for the sum of any finite number of functions.

Corollary. We see if

$$\underset{\substack{x\doteq a\\y\doteq b}}{L} (f + \phi) = A + B \quad , \quad \text{and} \quad \underset{\substack{x=a\\y=b}}{L} f = A$$

then

$$\underset{\substack{x \doteq a \\ y = b}}{L} \phi = B.$$

For we may write

$$f + \phi = (A + B) + \sigma_3$$

$$f = A + \sigma_4$$

and subtracting we get

$$\phi = B + (\sigma_3 - \sigma_4)$$

or

$$\underset{\substack{x \doteq a \\ y \doteq b}}{L} \phi = B,$$

since $(\sigma_3 - \sigma_4) \doteq 0$ as $x \doteq a$ and $y \doteq b$.

But we must not assume the converse of this proposition for $\underset{\substack{x \doteq a \\ y \doteq b}}{L} \{f(x,y) + \phi(x,y)\}$ may exist without $\underset{\substack{x \doteq a \\ y \doteq b}}{L} f(x,y)$ and $\underset{\substack{x \doteq a \\ y \doteq b}}{L} \phi(x,y)$ exist, as shown by the following example.

Example 2 :- The double limits

$$\underset{\substack{x \doteq 0 \\ y \doteq 0}}{L} \frac{2xy}{x^2+y^2} \quad \text{and} \quad \underset{\substack{x \doteq 0 \\ y \doteq 0}}{L} \frac{x^2 - 2xy + y^2}{x^2+y^2}$$

do not exist, but still we have

$$\underset{\substack{x \doteq 0 \\ y \doteq 0}}{L} \left\{ \frac{2xy}{x^2+y^2} + \frac{x^2 - 2xy + y^2}{x^2+y^2} \right\} = \underset{\substack{x \doteq 0 \\ y = 0}}{L} \frac{x^2+y^2}{x^2+y^2} = 1.$$

9. Proposition IX :- If the same double limit of two functions exists,

the double limit of their product is equal to the product of their double limits; i.e. if

$$\underset{\substack{x \doteq a \\ y \doteq b}}{L} f(x,y) = A \quad , \quad \text{and} \quad \underset{\substack{x \doteq a \\ y \doteq b}}{L} \phi(x,y) = B$$

then

$$\underset{\substack{x \doteq a \\ y \doteq b}}{L} [f(x,y) \cdot \phi(x,y)] = A \cdot B.$$

Proof. By the definition of the double limit we have

$$f(x,y) = A + \sigma_1 \tag{1.}$$

$$\phi(x,y) = B + \sigma_2 \tag{2}$$

where both σ's approach zero as $x \doteq a$, $y \doteq b$ simultaneously. Taking the product of (1.) and (2.) we have

$$f(x,y) \cdot \phi(x,y) = AB + (A\sigma_2 + B\sigma_1 + \sigma_1\sigma_2).$$

But the quantity in parenthesis will approach zero as $x \doteq a$, $y \doteq b$. Therefore we may write

$$\underset{\substack{x \doteq a \\ y \doteq b}}{L} [f(x,y) \cdot \phi(x,y)] = A \cdot B = \underset{\substack{x \doteq a \\ y \doteq b}}{L} f(x,y) \cdot \underset{\substack{x \doteq a \\ y \doteq b}}{L} \phi(x,y).$$

Corollary. In the case of n equal factors we have

$$\underset{\substack{x \doteq a \\ y \doteq b}}{L} \{f(x,y)\}^n = \left\{\underset{\substack{x \doteq a \\ y \doteq b}}{L} f(x,y)\right\}^n$$

if $\underset{\substack{x \doteq a \\ y \doteq b}}{L} f(x,y)$ exists and n is finite.

The converse of this proposition is not true, as is shown by the following example.

Example 3:- The double limits

$$\underset{\substack{x=0\\y=0}}{L} \frac{xy}{x^2+y^2}, \text{ and } \underset{\substack{x\doteq 0\\y\doteq 0}}{L} \frac{x^2+y^2}{xy}$$

do not exist, but still we have

$$\underset{\substack{x\doteq 0\\y\doteq 0}}{L} \left(\frac{xy}{x^2+y^2}\right)\left(\frac{x^2+y^2}{xy}\right) = 1.$$

It should be noted that $A \cdot B$ can never have the indeterminate form $0 \cdot \infty$, since by definition of the double limit both A and B must be finite.

10. Proposition X:- If the same double limit of two functions exists and one be different from zero, the quotient of the double limits is the double limit of their quotient; i.e. if

$$\underset{\substack{x\doteq a\\y\doteq b}}{L} f(x,y) = A, \quad \text{and} \quad \underset{\substack{x\doteq a\\y\doteq b}}{L} \phi(x,y) = B \neq 0$$

then

$$\underset{\substack{x\doteq a\\y\doteq b}}{L} \frac{f}{\phi} = \underset{\substack{x\doteq a\\y\doteq b}}{L} f(x,y) \div \underset{\substack{x\doteq a\\y\doteq b}}{L} \phi(x,y) = \frac{A}{B}.$$

Proof. By the definition of the double limit we have

$$f(x,y) = A + \sigma_1 \qquad (1.)$$

$$\phi(x,y) = B + \sigma_2 \qquad (2.)$$

where the σ's approach zero as $x \doteq a$, $y \doteq b$. By division we have

$$\frac{f(x,y)}{\phi(x,y)} = \frac{A+\sigma_1}{B+\sigma_2} = \frac{A}{B+\sigma_2} + \frac{\sigma_1}{B+\sigma_2}. \qquad (3.)$$

Now as $x \doteq a$, $y \doteq b$ simultaneously the last member of (3.) approaches $\frac{A}{B}$. Therefore we can write,

$$\underset{\substack{x \doteq a \\ y \doteq b}}{L} \frac{f(x,y)}{\phi(x,y)} = \frac{A}{B} = \underset{\substack{x \doteq a \\ y \doteq b}}{L} f(x,y) \div \underset{\substack{x \doteq a \\ y \doteq b}}{L} \phi(x,y).$$

However the double limit $\underset{\substack{x \doteq a \\ y \doteq b}}{L} \frac{f}{\phi}$ may exist without $\underset{\substack{x \doteq a \\ y \doteq b}}{L} f(x,y)$ and $\underset{\substack{x \doteq a \\ y \doteq b}}{L} \phi(x,y)$ exist, as shown by this example.

Example 4 :- The double limits

$$\underset{\substack{x \doteq 0 \\ y \doteq 0}}{L} \left(\frac{xy^3}{x^2+y^6}\right), \quad \text{and} \quad \underset{\substack{x \doteq 0 \\ y \doteq 0}}{L} \left(\frac{y^2}{x^2+y^6}\right)$$

do not exist, but still we have

$$\underset{\substack{x \doteq 0 \\ y \doteq 0}}{L} \left\{\frac{xy^3}{x^2+y^6} \div \frac{y^2}{x^2+y^6}\right\} = \underset{\substack{x \doteq 0 \\ y \doteq 0}}{L} xy = 0.$$

Chapter III.

Methods of Testing the Existance of Double Limits.

1. In this chapter we expect to discuss methods of testing special functions for the existance of double limits.

In very many cases it is very easy to settle the question of the existance of the double limit by showing that the double limit does not exist. Proposition I of last chapter gives us a very practical negative test of this kind. There we saw that, if the double limit $\underset{\substack{x=a \\ y=b}}{L} f(x,y)$ exists and is equal to A, then

$$\underset{x=a}{L} f(x, \phi(x)) = A$$

must hold for every $\phi(x)$ which is continuous and at the point $x=a$ has

the value b. Now if we can select our $\phi(x)$ in two ways such that $\underset{x \doteq a}{L} f(x, \phi(x))$ has two different limits then we know that the double limit does not exist at the point (a, b).

Example 1:- Given the function

$$z = \frac{x^2 - y^2}{x^2 + y^2}$$

to test at the point $x=0, y=0$, for the existance of double limit.

Let $y = 3x$ and we have

$$\underset{x \doteq 0}{L} \frac{x^2 - 9x^2}{x^2 + 9x^2} = -\frac{8}{10} = -\frac{4}{5}.$$

Let $y = 2x$ and we get

$$\underset{x \doteq 0}{L} \frac{x^2 - 4x^2}{x^2 + 4x^2} = -\frac{3}{5}$$

Therefore by proposition one of last chapter, we know that the double limit $\underset{\substack{x \doteq 0 \\ y \doteq 0}}{L} \frac{x^2 - y^2}{x^2 + y^2}$ does not exist.

2. In some simple functions the defining relation of the first chapter gives us a positive test for the existance of the double limit. Suppose we put $y = x$ in $f(x, y)$, and find that

$$\underset{x=a}{L} f(x, x) = A.$$

Then we know by Proposition I that, if there be a double limit at the point

(a, b), it must be A. Then if A is found to satisfy the defining relation

$$|f(a+\delta_1, b+\delta_2) - A| < \sigma \qquad (1.)$$

where $|\delta_1| < \delta$, and $|\delta_2| < \delta$, then we know that the double limit at the point (a, b) exists and is equal to A. However unless $f(x, y)$ is a rather simple funtion we have difficulty in determining whether A satisfies relation (1.)

Example 2:- Given the function

$$z = y \tan x$$

to test for the existance of the double limit at point $x=0$, $y=0$.

Let $y = x$, and we have

$$\underset{x=0}{L}\, x \tan x = 0.$$

Then 0 must be the double limit if there be any. Substituting 0 in relation (1.) we get

$$|(0+\delta_2) \tan(0+\delta_1) - 0| < \sigma$$

or

$$|\delta_2 \tan \delta_1| < \sigma.$$

Now by mere inspection we see that this relation is fulfilled, i.e. for every arbitrarily small positive number σ we can find a δ_1 and a δ_2 which

satisfy this relation.

3. The use of polar coördinates is sometimes useful in testing for double limits. Suppose we intersect the surface $z = f(x,y)$ with a right circular cylinder of radius ρ whose axis coincides with the z-axis. Then the curve of intersection is

$$z = f(\rho\cos\phi, \rho\sin\phi).$$

Since the double limit must by definition be a definite number then

$$\underset{\rho=0}{L}\, f(\rho\cos\phi, \rho\sin\phi)$$

must be finite and by Proposition I it must be independent of ϕ. Therefore we know if the

$$\underset{\rho=0}{L}\, f(\rho\cos\phi, \rho\sin\phi)$$

is not a definite finite number independent of ϕ that the double limit at the point at the point $(0,0)$ does not exist. But we must be careful not to assume that the double limit exists and is equal to A if

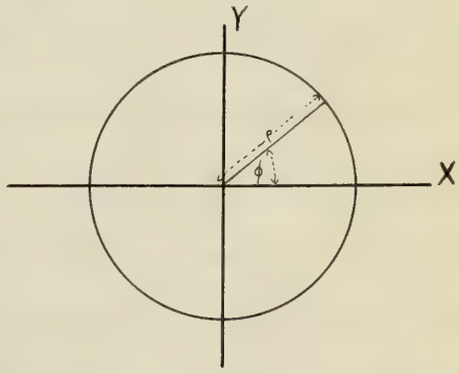

$$\underset{\rho=0}{L}\, f(\rho\cos\phi, \rho\sin\phi) = A^*$$

where A is a definite finite number.

Example 3:- Given the function

$$z = \frac{xy^2}{x^2+y^4}.$$

Substituting $x = \rho\cos\phi$, $y = \rho\sin\phi$, we have

$$\underset{\rho \doteq 0}{L} \frac{\rho\cos\phi \cdot \rho^2\sin^2\phi}{\rho^2\cos^2\phi + \rho^4\sin^4\phi} = \underset{\rho \doteq 0}{L} \frac{\rho\cos\phi\sin^2\phi}{\cos^2\phi + \rho^2\sin^4\phi} = 0.$$

Still the double limit does not exist, for put $x = my^2$ and we get

$$\underset{x \doteq 0}{L} \frac{my^4}{m^2y^4 + y^4} = \frac{m}{m^2+1}$$

which by Proposition I shows that the double limit does not exist.

4. We were not able to get any method of calculating double limits from du Bois-Reymond whose article we mentioned in Chapter I section 10. du Bois-Reymond missed our idea of the double limit altogether and studied functions of two variables from an entirely different standpoint. An example will show our different interests in functions of two real variables.

Example 4:- Given the function

$$z = \frac{x + (x+y)^2}{2x + y - (x+y)^2}$$

If first $x \doteq 0$ and then $y \doteq 0$, we get the limiting value 0; if first $y \doteq 0$ and then $x \doteq 0$ we get the value $\frac{1}{2}$. But if we put $y = \alpha x$ and then $x \doteq 0$ we get the limiting value $\frac{1}{2+\alpha}$ which has a continuous series of values if α varies from 0 to ∞.

In such a case we say the twice taken limits, i.e. $\underset{x \doteq 0}{L}\ \underset{y \doteq 0}{L}\ f(x,y)$ and $\underset{y \doteq 0}{L}\ \underset{x \doteq 0}{L}\ f(x,y)$ both exist, but the double limit $\underset{\substack{x \doteq 0 \\ y \doteq 0}}{L}\ f(x,y)$ does not exist.

du Bois-Reymond calls such points as the origin in this case "Stetigvieldeutigkeitspunkte" and devotes the paper to discussing functions at such points. He develops a method of constructing all possible values of $f(x,y)$ for $x=0$, $y=0$, which values he gets in the form of a curve which he calls the "Limitale". He does not discuss functions which have double limits, for such functions have no "Stetigvieldeutigkeitspunkte" with which he is interested.

5. In conclusion we can only say our general method of calculating double limits rests finally upon our fundamental definition given in Chapter I, section 2. In our work we found the negative test given in first section of this chapter the most useful, for the majority of functions considered had no double limit at the origin. In proving that a certain double limit did exist we have always used the method of section two.

Chapter IV.

Discussion of Special Functions.

In this chapter we expect to discuss a number of special problems. In general the problems used in the preceding chapters for illustrative purposes will not be further discussed here. In a few cases however problems will be repeated here for purposes of more complete discussion than was possible in the preceding pages.

Example 1:- Given the function

$$z = \frac{xy}{x^2+y^2}.$$

to investigate for a double limit at the origin.

$$\underset{x \doteq 0}{L}\ \underset{y \doteq 0}{L} \frac{xy}{x^2+y^2} = \underset{y \doteq 0}{L}\ \underset{x \doteq 0}{L} \frac{xy}{x^2+y^2} = 0.$$

$$\underset{x \doteq 0}{L} \frac{xy'}{x^2+y'^2} = 0, \text{ for every constant } y' \neq 0.$$

$$\underset{y \doteq 0}{L} \frac{x'y}{x'^2+y^2} = 0, \quad " \quad " \quad " \quad x' \neq 0.$$

Thus we see that the twice taken limits

and the single limits for constant x and constant y are all zero, yet the double limit does not exist. For if we put $y = mx$ we have

$$\underset{x \doteq 0}{L} \frac{mx^2}{x^2 + m^2x^2} = \frac{m}{1 + m^2}.$$

Since this is a function of m we know by Prop. I that the double limit at the point $x = 0$, $y = 0$ does not exist. In Chapter I, sec. 4, we showed that the "spring" of this function was one, i.e. by approaching along the curve $y = mx$ we get limiting values which vary from $-\frac{1}{2}$ to $+\frac{1}{2}$, as m varies from $-\infty$ to $+\infty$.

If we substitute

$$x = \rho \cos \phi$$
$$y = \rho \sin \phi$$

we get

$$z = \frac{\rho^2 \sin\phi \cdot \cos\phi}{\rho^2(\cos^2\phi + \sin^2\phi)} = \sin\phi \cdot \cos\phi$$

which shows that the surface is a straight line surface, each line element being parallel to the xy-plane.

If we now pass a plane through this surface parallel to the zy-plane and calculate the curves

of intersection of this plane with the surface, when $y = 0, 1/4, 1/2, 3/4, 1$, we shall get the four corresponding approximation curves. The data for these curves is as follows:-

$$y = 1/4 \quad , \quad z = \frac{4x}{16x^2+1}$$

z	0	.4	.5	.461	.4	.344	.3	.264	.235
x	0	.125	.25	.375	.5	.625	.75	.875	1.

$$y = 1/2 \quad , \quad z = \frac{2x}{4x^2+1}$$

z	0	.235	.4	.480	.5	.495	.461	.430	.4
x	0	.125	.25	.375	.5	.625	.75	.875	1.

$$y = 3/4 \quad , \quad z = \frac{12x}{16x^2+9}$$

z	0	.166	.3	.4	.461	.490	.5	.494	.48
x	0	.125	.25	.375	.5	.625	.75	.875	1.

$$y = 1 \quad , \quad z = \frac{x}{x^2+1}$$

z	0	.125	.235	.328	.4	.449	.48	.495	.5
x	0	.125	.25	.375	.5	.625	.75	.875	1.

An inspection of the curves shows that at some point z reaches

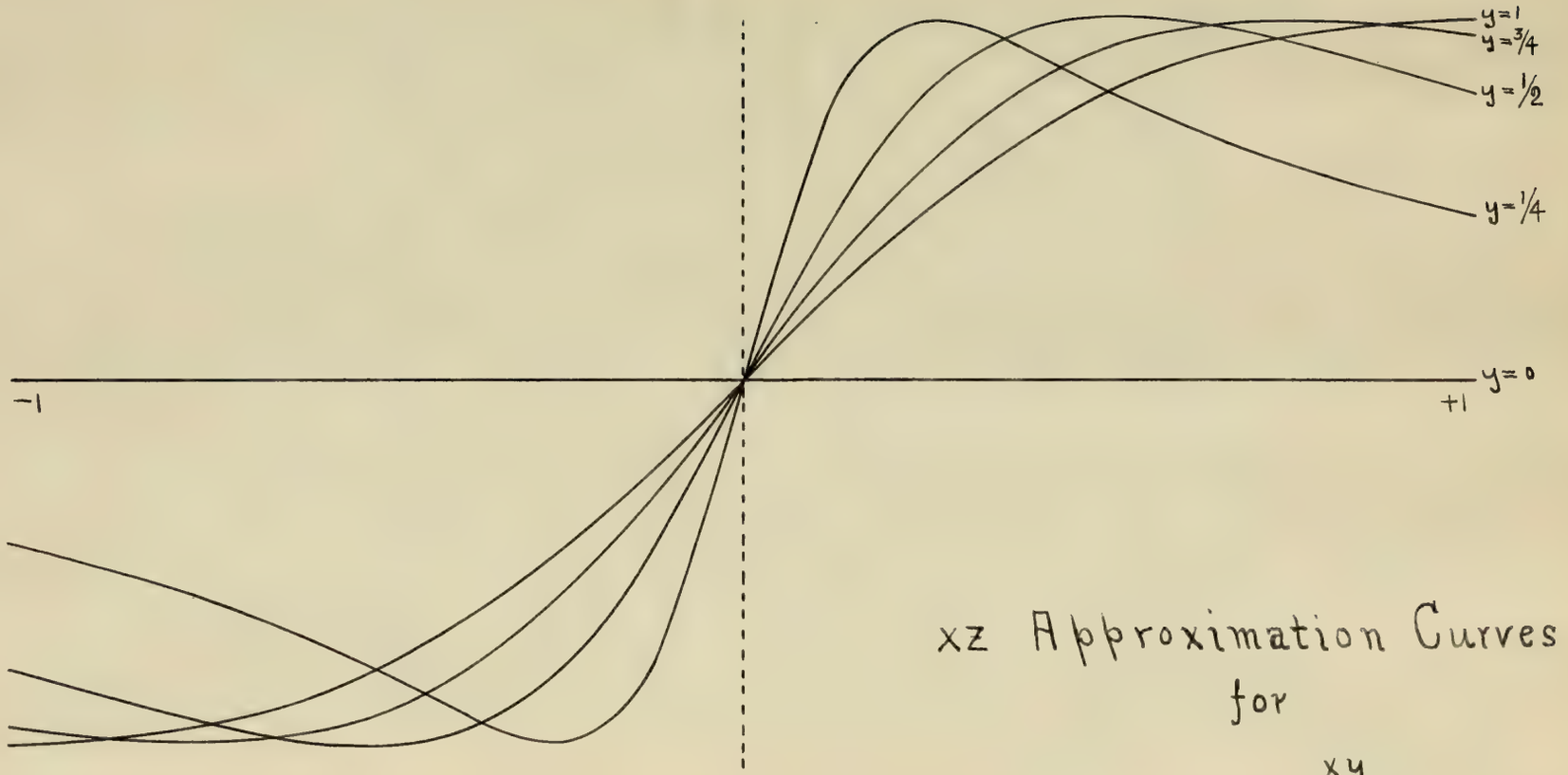

xz Approximation Curves
for

$$z = \frac{xy}{x^2+y^2}.$$

the value $+1/2$ and $-1/2$. This maximum and minimum approach the x-axis as y approaches zero. The drawings also show that the function is not uniformly convergent for the interval $-1 < x < +1$.

We constructed a model of this surface, which model is now among the models belonging to the mathematical department of the University of Illinois. Since the surface is a straight line surface, we made a model by stretching silk threads on a frame cut from a brass tube six inches in diameter. However the model does not represent the surface along the z-axis. The following table gives the calculations used in the construction of the model:-

If $y = mx$

then $z = \dfrac{m}{1+m^2}$

where $m = \tan\alpha$

α	m	z	α	m	z
0°	0	0	112.5	-2.4142	-.353
5	.0875	.086	135.	-1.	-1.
10	.1763	.170	157.5	-.4142	-.353
15	.2680	.250	180.	0	0
20	.3640	.321	202.5	.4142	.353
25	.4663	.383	225.	1.	1.
30	.5774	.433	247.5	2.4142	.353
35	.7002	.469	270.	∞	0
40	.8391	.492	292.5	-2.4142	-.353
45	1.	.500	315.	-1.	-1.
67.5	2.4142	.353	337.5	-.4142	-.353
90.	∞	0	360.	0	0

<u>Example 2</u>:- Given the function

$$z = \frac{xy^2}{x^2+y^4}$$

to test for double limit at the origin.

$$\underset{x=0}{L}\ \underset{y=0}{L}\ \frac{xy^2}{x^2+y^4} = \underset{y=0}{L}\ \underset{x=0}{L}\ \frac{xy^2}{x^2+y^4} = 0$$

$$\underset{x=0}{L}\ \frac{xy'^2}{x^2+y'^4} = 0 \text{ , for every constant } y' \neq 0$$

$$\underset{y=0}{L}\ \frac{x'y^2}{x^2+y^4} = 0 \text{ , " " " } x' \neq 0$$

If we put $y = mx$ then we get

$$\underset{x \doteq 0}{L} \frac{x^3 m^2}{x^2 + m^4 x^4} = \underset{x \doteq 0}{L} \frac{x m^2}{1 + m^4 x^2} = 0.$$

If we put $x = my$ then we get

$$\underset{y \doteq 0}{L} \frac{m y^3}{m^2 y^2 + y^4} = \underset{y \doteq 0}{L} \frac{m y}{m^2 + y^2} = 0.$$

If we put $y = m x^2$ then we get

$$\underset{x \doteq 0}{L} \frac{m^2 x^5}{x^2 + m^4 x^8} = \underset{x \doteq 0}{L} \frac{m^2 x^3}{1 + m^4 x^6} = 0.$$

If we put $x = m y^2$ we have

$$\underset{y \doteq 0}{L} \frac{m y^4}{m^2 y^4 + y^4} = \frac{m}{m^2 + 1}.$$

Therefore, by Prop. I, the double limit does not exist.

Here we have a function in which the twice taken limits, the single limits for constant x and for constant y, and the limits by linear approaches are all equal to zero, and still the double limit for $x = 0$, $y = 0$ does not exist.

Like Ex. 1 the "spring" here is equal to one. By quadratic approaches we get limiting values from $-\frac{1}{2}$ to $+\frac{1}{2}$.

We constructed a card-board model of this surface. We plotted on cards the curves of intersection for $x = \pm 1, \pm \frac{3}{4}, \pm \frac{2}{4}, \pm \frac{1}{4}, 0$ and for $y = \pm 1, \pm \frac{3}{4}, \pm \frac{1}{2}, \pm \frac{1}{4}, 0$. and after cutting along these curves

we fitted the cards together so their upper edges represented the surface. The calculations made were as follows:-

y \ x	−1	−.75	−.56¼	−.50	−.25	−.06¼	0	+.25	+.50	+.75	+1
±.25	−.062	−.082		−.123	−.235	−.500	0	.235	.123	.082	.062
±.5	−.235	−.300		−.400	−.500		0	.500	.400	.300	.235
±.75	−.429	−.480	−.500	−.496	−.371		0	.371	.496	.480	.429
±1	−.500	−.480		−.400	−.235		0	.235	.400	.480	.500
0	0	0		0	0		0	0	0	0	0

This table gives the value of z for given values of x and y; thus for x=1, y=1, we have z=.5 Each curve of intersection parallel to the zx-plane is symetrical in opposite quadrants. Each curve of intersection parallel to the zy-plane is symetrical with respect to the x-axis and is either all positive or all negative.

From the data of the above table we made drawings of the approximation curves for y=¼, ½, ¾ and 1. We notice that each curve has a maximum where z=½ and a minimum where z=−½. As y becomes small this maximum and

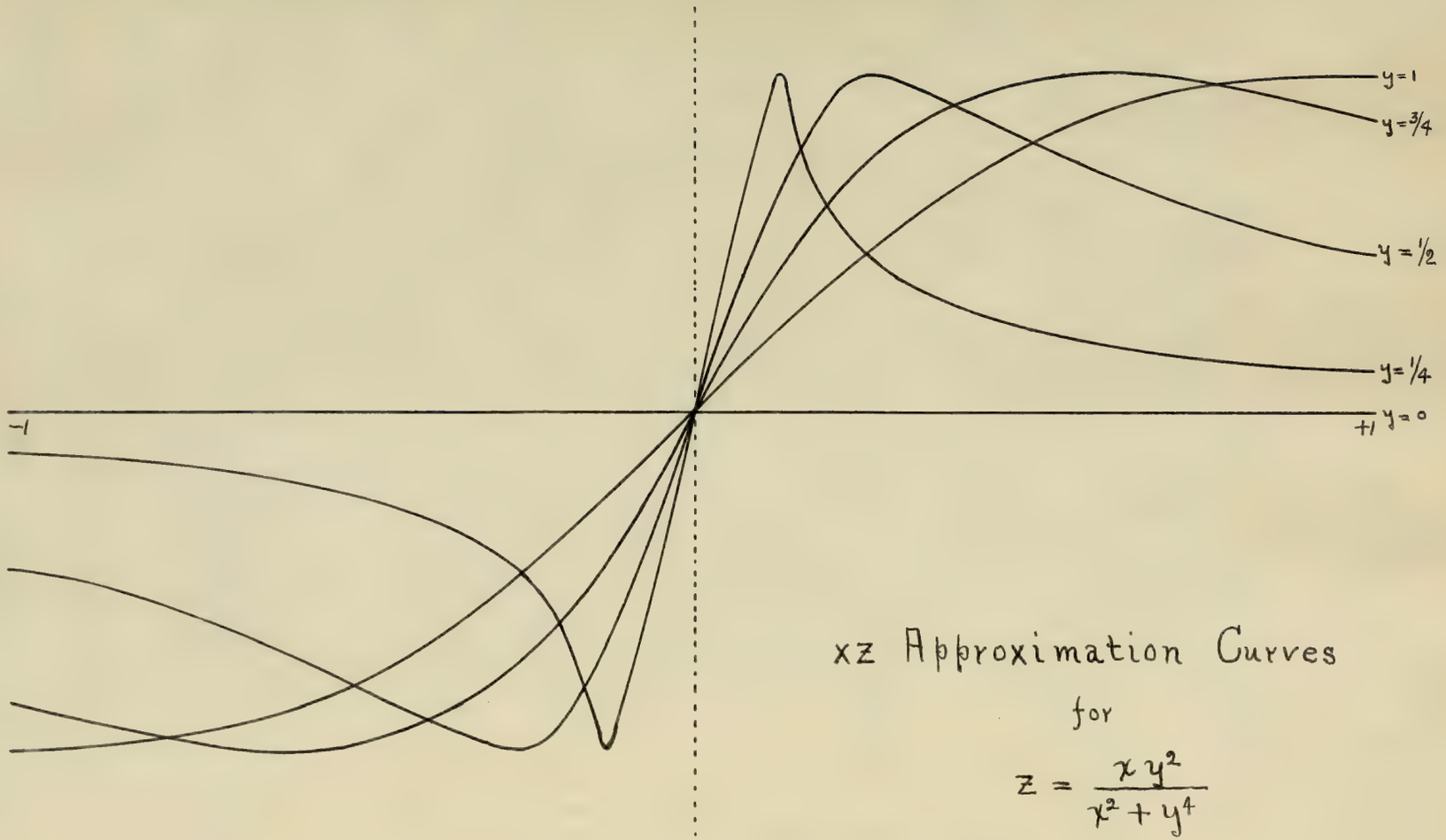

xz Approximation Curves

for

$$z = \frac{x y^2}{x^2 + y^4}$$

minimum approach the axis of x. Therefore the function is not uniformly convergent for the interval $-1 < x < +1$.

<u>Example 3:-</u> Given the function

$$z = \frac{xy}{x+y}$$

to test for the existance of double limit at the origin. Here we have

$$\underset{x=0}{L}\ \underset{y=0}{L}\ \frac{xy}{x+y} = 0.$$

$$\underset{y=0}{L}\ \underset{x=0}{L}\ \frac{xy}{x+y} = 0.$$

$$\underset{y=0}{L}\ f(\bar{x},y) = 0, \quad \text{for constant } \bar{x} \neq 0.$$

$$\underset{x=0}{L}\ f(x,\bar{y}) = 0, \quad \text{" } \quad \text{" } \quad \bar{y} \neq 0.$$

If we put

$$y = m x^{\mu} \qquad 1 \leqq \mu < \infty$$

then

$$\underset{x=0}{L}\ \frac{mx^{\mu+1}}{x+mx^{\mu}} = \underset{x=0}{L}\ \frac{mx^{\mu}}{1+mx^{\mu-1}} = 0.$$

Still the double limit does not exist, for if we put

$$x = my^2 - y$$

we get

$$\underset{y=0}{L}\ \frac{my^3 - y^2}{my^2 - y + y} = \underset{y=0}{L}\ \frac{my-1}{m} = -\frac{1}{m};$$

therefore the double limit does not exist by Prop. I.

If we put into polar coördinates by substituting

$$x = \rho \cos \phi$$
$$y = \rho \sin \phi$$

then we get

$$z = \frac{\rho^2 \cos\phi \cdot \sin\phi}{\rho(\cos\phi + \sin\phi)} = \rho \frac{\cos\phi \cdot \sin\phi}{\cos\phi + \sin\phi}$$

which shows that the surface is a straight line surface, each straight line element passing through the origin.

We made a model of this surface by stretching silk threads on a frame made of galvanized iron. The frame was made by cutting away all of a circular cylinder, six inches in diameter by seven inches long, except a narrow strip along the intersection of the surface with the cylinder. The following calculations were made in constructing the model.

$$z = \frac{\sin\phi}{1 + \tan\phi}, \quad \text{for } \rho = 1.$$

$\phi°$	315	320	325	330	335	340	345	350	355	360	5
Z	∞	-3.99	-1.913	-1.182	-.791	-.537	-.353	-.210	-.095	0	.080
$\phi°$	10	15	20	25	30	35	40	45	50	55	60
Z	.147	.204	.250	.287	.316	.337	.349	.353	.349	.337	.316
ϕ	65	70	90	100	110	120	130	135	140	180	270
Z	.287	.250	0	-.210	-.537	-1.182	-3.99	∞	3.99	0	0

We plotted four approximation curves from the following calculations:-

$$y = 1/4 \qquad Z = \frac{x}{4x+1}$$

x	-8/8	-7/8	-6/8	-5/8	-4/8	-3/8	-2/8	-1/8	0	1/8	2/8	3/8	4/8	5/8	6/8	7/8	1
y	.333	.350	.375	.416	.5	.75	∞	-.25	0	.083	.125	.150	.166	.178	.187	.194	.200

$$y = 2/4 \qquad Z = \frac{x}{2x+1}$$

x	-1	-7/8	-6/8	-5/8	-4/8	-3/8	-2/8	-1/8	0	1/8	2/8	3/8	4/8	5/8	6/8	7/8	1
y	1.	1.16	1.5	2.5	∞	-1.33	-.5	-.166	0	.1	.166	.214	.25	.277	.3	.318	.333

$$y = 3/4 \qquad Z = \frac{3x}{4x+3}$$

x	-1	-7/8	-6/8	-5/8	-4/8	-3/8	-2/8	-1/8	0	1/8	2/8	3/8	4/8	5/8	6/8	7/8	1
y	3	5.25	∞	-3.75	-1.5	-.75	-.375	-.150	0	.107	.187	.25	.3	.340	.375	.403	.428

$$y = 1 \qquad Z = \frac{x}{x+1}$$

x	-8/8	-7/8	-6/8	-5/8	-4/8	-3/8	-2/8	-1/8	0	1/8	2/8	3/8	4/8	5/8	6/8	7/8	1
y	∞	-7	-3	-1.66	-1.	-.6	-.333	-.142	0	.111	.2	.272	.333	.384	.428	.466	.5

We see that these curves are not uniformly convergent for the interval $-1 < x < +1$.

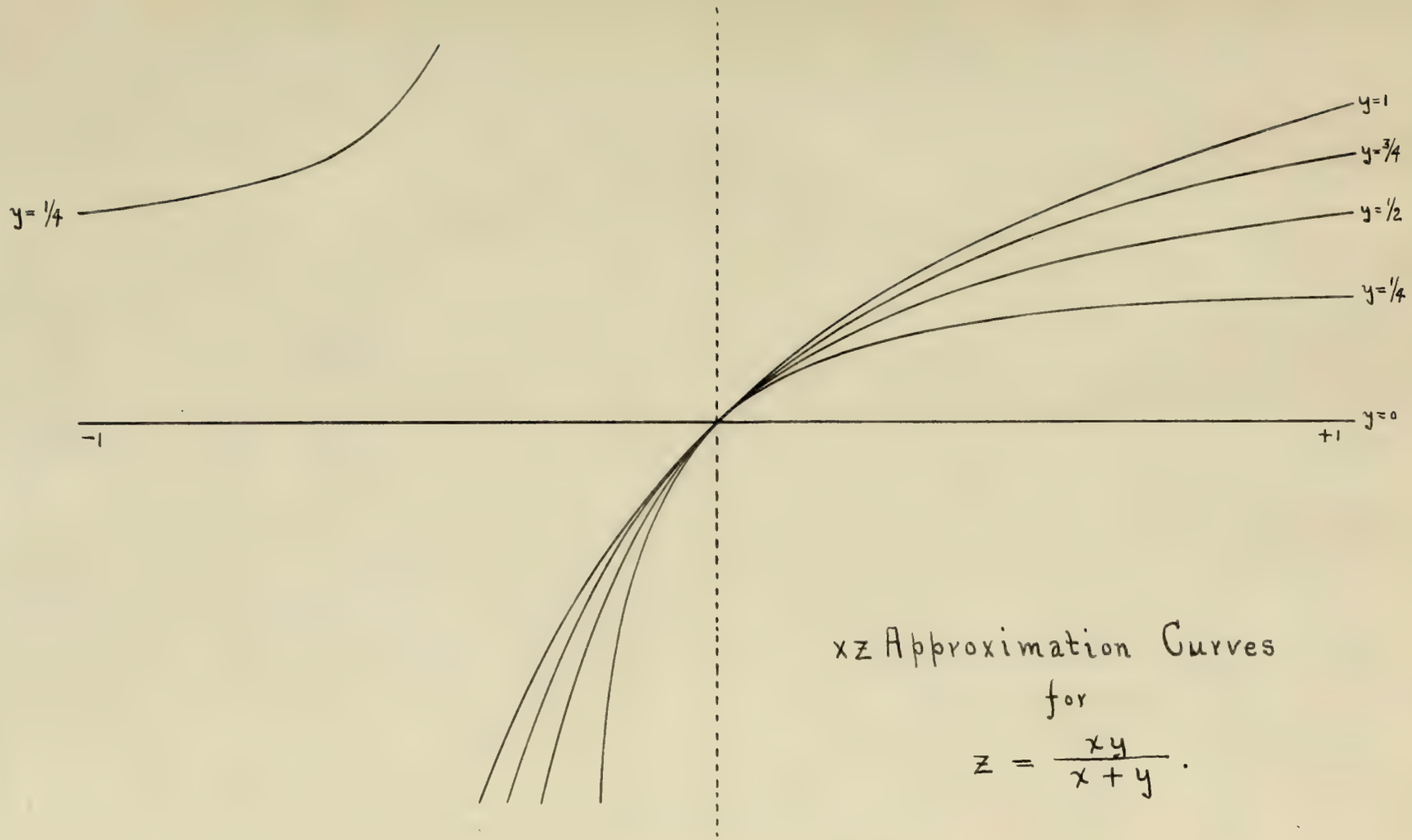

xz Approximation Curves
for
$$z = \frac{xy}{x+y}.$$

The final result is proved only for curves of the type $x = m y^{b}$ or $y = m x^{a}$

from which about $x = a_0 y^{n} + a_1 y^{n-1} + \cdots + a_n$?

Example 4:- Given the function

$$z = \frac{x y^n}{x^2 + y^{2n}}$$

to test for the existance of the double limit at the origin.

Examples 1 and 2 are special cases of this general form.

This function is continuous at the origin with respect to x alone and y alone; for

$$\underset{x \doteq 0}{L}\ \underset{y \doteq 0}{L}\ \frac{x y^n}{x^2 + y^{2n}} = \underset{y \doteq 0}{L}\ \underset{x \doteq 0}{L}\ \frac{x y^n}{x^2 + y^{2n}} = 0.$$

Let $y = mx^a$. and then we have

$$\underset{x \doteq 0}{L}\ \frac{x m^n x^{an}}{x^2 + m^{2n} x^{2an}} = 0 \quad ; \quad \text{where } a \leqq n.$$

For $x = my^b$, we have

$$\underset{y \doteq 0}{L}\ \frac{m y^{n+b}}{m^2 y^{2b} + y^{2n}} = 0 \ ; \quad \text{where } b < n,$$

$$= \frac{m}{m^2+1} \ ; \quad \text{" } \quad b = n.$$

Here we have a function where, by every approach to the origin along a continuous curve of less than the nth degree, we always have the same limiting value 0 and still the double limit does not exist; for along the curve $x = my^n$, we do not come to the limiting value 0.

Example 5:- Given the function

$$z = \frac{xy}{x^2 + y^3}$$

to test for the existance of the double limit at the origin.

This function is continuous with respect to each variable separately; for

$$\underset{x \doteq 0}{L}\ \underset{y \doteq 0}{L}\ \frac{xy}{x^2+y^3} = \underset{y \doteq 0}{L}\ \underset{x \doteq 0}{L}\ \frac{xy}{x^2+x^3} = 0.$$

Let $y = mx$ and we have

$$\underset{x \doteq 0}{L}\ \frac{mx^2}{x^2+m^3x^3} = \underset{x \doteq 0}{L}\ \frac{m}{1+m^3x} = m.$$

Therefore the double limit does not exist, by Prop. I.

Since by linear approaches to the origin we may get limiting values which vary from $-\infty$ to $+\infty$, we see at once that this function has an infinite spring at the point $x=0$, $y=0$.

<u>Example 6:-</u> Given the function

$$z = \frac{xy}{x^3 + y^3}$$

To test for the existance of the double limit at the origin.

This function also has an infinite spring, but differs from the last example in that by continuous linear approaches we can

obtain as limiting values only $-\infty, 0, +\infty$. We have here

$$\lim_{x \doteq 0} \lim_{y \doteq 0} \frac{xy}{x^3+y^3} = \lim_{y \doteq 0} \lim_{x \doteq 0} \frac{xy}{x^3+y^3} = 0.$$

$$\lim_{x \doteq 0} \frac{x\bar{y}}{x^3+\bar{y}^3} = 0 \text{ ; for every constant } y \neq 0.$$

$$\lim_{y \doteq 0} \frac{\bar{x}y}{\bar{x}^3+y^3} = 0 \text{ ; } \quad " \quad " \quad " \quad x \neq 0.$$

Let $y = mx$ and then we have

$$\lim_{x \doteq 0} \frac{mx^2}{x^3+m^3x^3} = \lim_{x \doteq 0} \frac{m}{x(1+m^3)} = \infty \text{ ; } m \neq 0 \text{ or } \infty.$$

$$= 0 \text{ ; } m = 0 \text{ or } \infty.$$

Therefore the double limit does not exist for by definition it must always be a definite finite number.

Let $x = \rho\cos\phi$ and $y = \rho\sin\phi$ and we get

$$\lim_{\rho \doteq 0} \frac{\rho^2(\cos\phi \cdot \sin\phi)}{\rho^3(\cos^3\phi + \sin^3\phi)} = \infty,$$

except for $\phi = 0°, 90°, 180°,$ or $270°$. Thus by linear approaches to the origin we get as limiting values only 0 and $\pm\infty$. More specifically we get

$$\lim_{\rho \doteq 0} \frac{\cos\phi \cdot \sin\phi}{\rho(\cos^3\phi + \sin^3\phi)} = 0 \text{ ; } \quad \phi = 0, 90°, 180° \text{ or } 270°$$

$$" \quad = +\infty \text{ ; } \quad 0 < \phi < 90°$$

$$" \quad = -\infty \text{ ; } \quad 90 < \phi < 135$$

$$" \quad = +\infty \text{ ; } \quad 135 < \phi < 180$$

$$" \quad = -\infty \text{ ; } \quad 180 < \phi < 270$$

$$" \quad = +\infty \text{ ; } \quad 270 < \phi < 315$$

$$" \quad = -\infty \text{ ; } \quad 315 < \phi < 360$$

Example 7:- Given the function

$$z = \frac{ax + by}{x + y}$$

to test for the existance of the double limit at the origin.

Here we have a function which has a different limit at the origin when regarded as a function of x alone than when regarded as a function of y alone.

$$\underset{x \doteq 0}{L} \frac{ax + by}{x + y} = b; \text{ for constant } y \neq 0.$$

$$\underset{y \doteq 0}{L} \frac{ax + by}{x + y} = a; \quad " \quad " \quad x \neq 0.$$

Let $y = mx$ and then we have

$$\underset{x \doteq 0}{L} \frac{ax + bmx}{x + mx} = \frac{a + bm}{1 + m}.$$

Therefore the double limit does not exist by Prop. I.

Clearing of fractions, we get

$$by + ax - yz - xz = 0$$

which is the equation of an hyperbola for either x or y regarded as constant. Therefore the approximation curves parallel to either the xz-plane or the yz-plane are hyperbolas.

Let $x = \rho \cos \phi$ and $y = \rho \sin \phi$, and then we have

$$z = \frac{a \cos \phi + b \sin \phi}{\cos \phi + \sin \phi}$$

which shows this to be a straight

line surface the elements being parallel to the xy-plane.

For $\phi = 0$ or 180, $z = a$

" $\phi = 90$ " 270, $z = b$

" $\phi = 45$, $z = \frac{1}{2}(a+b)$

" $\phi = \tan^{-1}\left(-\frac{a}{b}\right)$, $z = 0$

<u>Example 8</u>:- Given the function

$$z = \frac{x+(x+y)^2}{2x+y-(x+y)^2}$$

to test for the existance of the double limit at the origin.

Here we meet for the first time a function of x, y which, regarded as a function of either alone, gives us in the limit a function of the other variable, the limiting point being as before the origin. Here we have

$$\underset{x \doteq 0}{L}\ \underset{y \doteq 0}{L}\ \frac{x+(x+y)^2}{2x+y-(x+y)^2} = \underset{x \doteq 0}{L}\ \frac{1+x}{2-x} = \frac{1}{2}.$$

$$\underset{y \doteq 0}{L}\ \underset{x \doteq 0}{L}\ \frac{x+(x+y)^2}{2x+y-(x+y)^2} = \underset{y \doteq 0}{L}\ \frac{y}{1-y} = 0.$$

Therefore the double limit does not exist by Prop. I.

$$\underset{x \doteq 0}{L}\ \frac{x+(x+\bar{y})^2}{2x+y-(x+\bar{y})^2} = \frac{\bar{y}}{1-\bar{y}}, \text{ for constant } y \neq 0.$$

$$\underset{y \doteq 0}{L}\ \frac{\bar{x}+(\bar{x}+y)^2}{2\bar{x}+y-(\bar{x}+y)^2} = \frac{1+\bar{x}}{2-\bar{x}}, \quad " \quad " \quad x \neq 0.$$

If we let $y = mx$, then we have

$$\lim_{x \doteq 0} \frac{x + (x + mx)^2}{2x + mx - (x + mx)^2} = \lim_{x \doteq 0} \frac{1 + x(1+m)^2}{2 + m - x(1+m)^2} = \frac{1}{2+m}.$$

If we substitute $x = \rho \cos\phi$, $y = \rho \sin\phi$, then

$$\lim_{\rho \doteq 0} \frac{\rho \cos\phi + \rho^2(\cos\phi + \sin\phi)^2}{2\rho\cos\phi + \rho\sin\phi - \rho^2(\cos\phi + \sin\phi)^2}$$

$$= \lim_{\rho \doteq 0} \frac{\cos\phi + 2\rho\cos\phi \cdot \sin\phi}{2\cos\phi + \sin\phi - 2\rho\cos\phi \cdot \sin\phi}$$

$$= \lim_{\rho \doteq 0} \frac{1 - 2\rho\sin\phi}{2 + \tan\phi - 2\rho\sin\phi} = \frac{1}{2 + \tan\phi}$$

as we might effect from above where $m = \tan\phi$.

The equation of intersection of this surface with a plane through the z-axis is

$$2z + z \cdot \tan\phi - 2\rho \cdot z\sin\phi = 1 + 2\rho\sin\phi,$$

which is a quadratic in ρ and z, and is an hyperbola since $(H^2 - AB) > 0$, where $\phi \neq 0$ or $180°$.

By clearing of fractions in the original form we get

$$2zx + zy - z(x+y)^2 = x + (x+y)^2.$$

For constant y this is a cubic in z and x; for constant x, a cubic in z and y. Thus the plane intersections parallel to both zx-plane and zy-plane are cubic curves.

Example 9:- Given the function

$$z = \frac{y^5 + xy^3}{x^2}$$

to test for the existance of the double limit at the origin.

Here we have a function in which we obtain the limiting value zero by every linear approach except along the y-axis, in which case we get ∞. Here we have

$$\underset{x \doteq 0}{L}\ \underset{y \doteq 0}{L}\ \frac{y^5 + xy^3}{x^2} = 0,$$

$$\underset{y \doteq 0}{L}\ \underset{x \doteq 0}{L}\ \frac{y^5 + xy^3}{x^2} = \infty.$$

$$\underset{x \doteq 0}{L}\ \frac{\bar{y}^5 + x\bar{y}^3}{x^2} = \infty, \text{ for constant } y \neq 0,$$

$$\underset{y \doteq 0}{L}\ \frac{y^5 + \bar{x}y^3}{\bar{x}^2} = 0, \quad " \quad " \quad x \neq 0.$$

Let $y = mx$ and then we have

$$\underset{x \doteq 0}{L}\ \frac{m^5x^5 + xm^3x^3}{x^2} = \underset{x \doteq 0}{L}\left(m^5x^3 + m^3x\right) = 0.$$

Let $y^5 = mx^2$ and then we have

$$\underset{x \doteq 0}{L}\ \frac{mx^2 + x(mx^2)^{3/5}}{x^2} = \underset{x \doteq 0}{L}\left(m + m^{3/5}x^{1/5}\right) = m.$$

Therefore this function has an infinite spring at the origin.

Example 10:- Given the function

$$z = \frac{x^4 + y\sqrt{y^3 - x^3}}{y^4 + x\sqrt{x^5 + y^5}}$$

to test for the existance of the

double limit at the origin.

Here, as in Ex. 8, the single limits when x is regarded as a constant or when y is regarded as a constant depend upon the constant selected for these variables. We have here

$$\underset{x\doteq 0}{L}\ \underset{y\doteq 0}{L}\ \frac{x^4+y\sqrt{y^3-x^3}}{y^4+x\sqrt{x^5+y^5}} = \underset{x\doteq 0}{L}\ \frac{x^4}{x^3\sqrt{x}} = \underset{x\doteq 0}{L}\ \frac{x^4}{x^{\frac{7}{2}}} = \underset{x=0}{L}\ \sqrt{x}=0$$

$$\underset{y\doteq 0}{L}\ \underset{x\doteq 0}{L}\ f(x,y) = \underset{y\doteq 0}{L}\ \frac{y\sqrt{y^3}}{y^4} = \underset{y\doteq 0}{L}\ \frac{y^{\frac{5}{2}}}{y^4} = \underset{y\doteq 0}{L}\ \frac{1}{y^{3/2}} = \infty.$$

$$\underset{y\doteq 0}{L}\ \frac{\bar{x}^4+y\sqrt{y^3-\bar{x}^3}}{y^4+\bar{x}\sqrt{\bar{x}^5+y^5}} = \sqrt{\bar{x}}, \text{ for constant } x\neq 0.$$

$$\underset{x\doteq 0}{L}\ \frac{x^4+\bar{y}\sqrt{\bar{y}^3-x^3}}{\bar{y}^4+x\sqrt{x^5+\bar{y}^5}} = \bar{y}^{-\frac{3}{2}}, \quad " \quad " \quad y\neq 0.$$

Let $y = mx$ and we have

$$\underset{x\doteq 0}{L}\ \frac{x^4+mx\sqrt{m^3x^3-x^3}}{m^4x^4+x\sqrt{m^5x^5+x^5}} = \underset{x\doteq 0}{L}\ \frac{x^2+m\sqrt{m^3x-x}}{m^4x^2+x\sqrt{m^5x+x}} = 0.$$

Let $y = x+mx^3$ and we get

$$\underset{x\doteq 0}{L}\ \frac{x^4+(x+mx^3)\sqrt{(x+mx^3)^3-x^3}}{(x+mx^3)^4+x\sqrt{x^5+(x+mx^3)^5}} =$$

$$= \underset{x\doteq 0}{L}\ \frac{x^{1/2}+(1+mx)\sqrt{3m+3m^2x^2+m^3x^4}}{x^{1/2}(1+mx^2)^4+\sqrt{1+(1+mx^2)^5}}$$

$$= \sqrt{\frac{3m}{2}}.$$

Therefore the double limit does not exist by Prop. I. Here we have a function in which the double limit at the

origin does not exist and where the spring is infinite. Approaching the origin along the x-axis we obtain the limit zero, while approaching along the y-axis we get ∞. By approaches along the curve $y = x + mx^3$ we get limits all the way from 0 to ∞.

<u>Example 11</u>:- Given the function

$$z = \frac{ax^2 + bxy + cy^2}{a_1x^2 + b_1xy + c_1y^2}$$

to test for double limit at the origin.

This function has some interesting special cases. Here we have

$$\lim_{x \doteq 0} \lim_{y \doteq 0} f(x,y) = \frac{a}{a_1},$$

$$\lim_{y \doteq 0} \lim_{x \doteq 0} f(x,y) = \frac{c}{c_1},$$

$$\lim_{x \doteq 0} f(x,\bar{y}) = \frac{c}{c_1}, \text{ for constant } y \neq 0.$$

$$\lim_{y \doteq 0} f(\bar{x},y) = \frac{a}{a_1}, \quad \text{" } \quad \text{" } \quad x \neq 0.$$

Let $y = mx$ and we have

$$\lim_{x=0} \frac{ax^2 + mbx^2 + cm^2x^2}{a_1x^2 + mb_1x^2 + c_1m^2x^2} = \frac{a + mb + m^2c}{a_1 + mb_1 + m^2c_1}$$

Therefore the double limit does not exist by Prop. I.

If $\frac{a}{a_1} = \frac{c}{c_1} \neq \frac{b}{b_1}$, then the twice taken limits, and limits for constant x and constant y are all equal. For

example take

$$z = \frac{4x^2 + 5xy + 6y^2}{2x^2 + xy + 3y^2}.$$

Then

$$\underset{x \doteq 0}{L}\ \underset{y \doteq 0}{L}\ f(x,y) = \underset{y \doteq 0}{L}\ \underset{x \doteq 0}{L}\ f(x,y) = \underset{x \doteq 0}{L}\ f(x,\bar{y}) = \underset{y \doteq 0}{L}\ f(\bar{x},y) = 2$$

and still the double limit at the origin does not exist.

<u>Example 12:-</u> Given the function

$$z = \frac{ay^2 + bx + cy}{a_1 y^2 + b_1 x + c_1 y}$$

to test for the existance of the double limit at the origin.

Here we have another function interesting for some of its special cases. By certain restrictions upon the coefficients, we can get a special case where by the twice taken limits and by approaches along curves $y = mx^n$ or $x = my^n$, $0 < n < \infty$, we always get the same limit, yet the double limit does not exist. We have here

$$\underset{x \doteq 0}{L}\ \underset{y \doteq 0}{L}\ \frac{ay^2 + bx + cy}{a_1 y^2 + b_1 x + c_1 y} = \underset{x \doteq 0}{L}\ \frac{bx}{b_1 x} = \frac{b}{b_1},$$

$$\underset{y \doteq 0}{L}\ \underset{x \doteq 0}{L}\ \frac{ay^2 + bx + cy}{a_1 y^2 + b_1 x + c_1 y} = \underset{y \doteq 0}{L}\ \frac{ay^2 + cy}{a_1 y^2 + c_1 y} = \frac{c}{c_1},$$

$$\underset{x \doteq 0}{L}\ f(x,\bar{y}) = \frac{a\bar{y} + c}{a_1 \bar{y} + c_1}, \text{ for constant } y \neq 0,$$

$$\underset{y \doteq 0}{L} f(\bar{x}, y) = \frac{b\bar{x}}{b_1\bar{x}} = \frac{b}{b_1}, \text{ for constant } x \neq 0.$$

If $p = \frac{b}{b_1} = \frac{c}{c_1} \neq \frac{a}{a_1}$ and $b = c$, $b_1 = c_1$, then if we let $y = mx^n$, where $0 < n < \infty$ we get

$$\underset{x \doteq 0}{L} \frac{a m^2 x^{2n} + bx + c\, mx^n}{a_1 m^2 x^{2n} + b_1 x + c_1 mx^n} = \frac{b}{b_1} = p.$$

If we let $x = my^n$ then we have

$$\underset{y \doteq 0}{L} \frac{ay^2 + bmy^n + cy}{a_1 y^2 + b_1 m y^n + c_1 y} = \frac{c}{c_1} = p.$$

Thus under these restrictions, we have

$$\underset{x \doteq 0}{L}\, \underset{y \doteq 0}{L} f(x, y) = \underset{y \doteq 0}{L}\, \underset{x \doteq 0}{L} f(x, y) = \underset{y \doteq 0}{L} f(\bar{x}, y) = \underset{x \doteq 0}{L} f(x, mx^n)$$
$$= \underset{y \doteq 0}{L} f(my^n, y) = p,$$

and still the double limit does not exist, for if we substitute $y = mx^2 - x$, we have

$$\underset{x \doteq 0}{L} \frac{a(mx^4 - 2mx^3 + x^2) + bx + c(mx^2 - x)}{a_1(mx^4 - 2mx^3 + x^2) + b_1 x + c_1(mx^2 - x)}$$

$$= \underset{x \doteq 0}{L} \frac{a(mx^2 - 2mx + 1) + cm}{a_1(mx^2 - 2mx + 1) + c_1 m} = \frac{a + cm}{a_1 + c_1 m}$$

since $b = c$ and $b_1 = c_1$.

<u>Example 13:-</u> Given the function

$$z = \frac{5y^2 + 4x + 4y}{3y^2 + 2x + 2y}$$

to test for the existance of the double limit at the origin.

This is simply a special case of Ex. 12. We have here

$$\underset{x \doteq 0}{L}\ \underset{y \doteq 0}{L}\ \frac{5y^2+4x+4y}{3y^2+2x+2y} = 2,$$

$$\underset{y \doteq 0}{L}\ \underset{x \doteq 0}{L}\ \frac{5y^2+4x+4y}{3y^2+2x+2y} = 2,$$

$$\underset{x \doteq 0}{L}\ f(x, \bar{y}) = \frac{5\bar{y}+4}{3\bar{y}+2}, \text{ constant } y \neq 0,$$

$$\underset{y \doteq 0}{L}\ f(\bar{x}, y) = \frac{4\bar{x}}{2\bar{x}} = 2, \text{ constant } x \neq 0.$$

If we let $y = mx$, then we have

$$\underset{x \doteq 0}{L}\ \frac{5m^2x^2+4x+4mx}{3m^2x^2+2x+2mx} = 2.$$

If we let $x = my$, then we have

$$\underset{y \doteq 0}{L}\ \frac{5y^2+4my+4y}{3y^2+2my+2y} = 2.$$

If we let $y = mx^n$ where $1 < n < \infty$, then we have

$$\underset{x \doteq 0}{L}\ \frac{5m^2x^{2n}+4x+4mx^n}{3m^2x^{2n}+2x+2mx^n} =$$

$$\underset{x \doteq 0}{L}\ \frac{5m^2x^{2n-1}+4+4mx^{n-1}}{3m^2x^{2n-1}+2+2mx^{n-1}} = 2$$

If we let $x = my^n$ where $1 < n < \infty$, then we get

$$\underset{y \doteq 0}{L}\ \frac{5y^2+4my^n+4y}{3y^2+2my^n+2y} = 2.$$

But if we let $y = mx^2 - x$, then we have

$$\underset{x \doteq 0}{L} \frac{5(m^2x^4 - 2mx^3 + x^2) + 4x + 4(mx^2 - 4x)}{3(m^2x^4 - 2mx^3 + x^2) + 2x + 2(mx^2 - 4x)}$$

$$= \underset{x \doteq 0}{L} \frac{5m^2x^2 - 10mx + 5 + 4m}{3m^2x^2 - 6mx + 3 + 2m} = \frac{5 + 4m}{3 + 2m}$$

which shows that the double limit does not exist.

<u>Example 14</u>:- Given the function

$$z = \frac{(x+y)^4 + 2xy^2 + x^2y}{(x+y)^5 + xy^2 + x^2y}$$

to test for the existance of double limit at the origin.

Here we have a function in which the twice taken limits are ∞ while all limits obtained by linear approaches are finite. We have here

$$\underset{x \doteq 0}{L}\ \underset{y \doteq 0}{L} \frac{(x+y)^4 + 2xy^2 + x^2y}{(x+y)^5 + xy^2 + x^2y} = \underset{x \doteq 0}{L} \frac{1}{x} = \infty,$$

$$\underset{y \doteq 0}{L}\ \underset{x \doteq 0}{L} f(x,y) = \underset{y \doteq 0}{L} \frac{1}{y} = \infty,$$

$$\underset{y \doteq 0}{L} f(\bar{x},y) = \frac{1}{\bar{x}}, \text{ for constant } x \neq 0,$$

$$\underset{x \doteq 0}{L} f(x,\bar{y}) = \frac{1}{\bar{y}}, \quad \text{"} \quad \text{"} \quad y \neq 0.$$

But if we put $y = mx$, then we have

$$\underset{x \doteq 0}{L} \frac{x^4(1+m)^4 + 2m^2x^3 + mx^3}{x^5(1+m)^5 + m^2x^3 + mx^3} = \underset{x \doteq 0}{L} \frac{x(1+m)^4 + 2m^2 + m}{x^2(1+m)^4 + m^2 + m}$$

$$= \frac{2m+1}{m+1}$$

which is always finite except for $m=0$ or ∞. From this last equation we see by Prop. I. that the double limit does not exist.

<u>Example 15</u>:- Given the function

$$z = \frac{x^3+2xy+y^2}{x^3+xy+y^2}$$

to find the limits.

In this function all the limits are finite and lie between 1 and 2 inclusive.

(1.) $\underset{x \doteq 0}{L}\ \underset{y \doteq 0}{L}\ f(x,y) = 1.$

(2.) $\underset{x \doteq 0}{L}\ f(x, m.x^{\mu}) = 1$, for $\infty > \mu > 2$, m arbitrary.

(3.) $\underset{x \doteq 0}{L}\ f(x, m\,x^{\mu}) = \frac{1+2m}{1+m}$, " $\mu = 2$ and for $0 < m < \infty$, we have $1 < \frac{1+2m}{1+m} < 2$.

(4.) $\underset{x \doteq 0}{L}\ f(x, m x^{\mu}) = \frac{2+m}{1+m}$, for $\mu = 1$ and for $0 < m < \infty$, we have $2 > \frac{2+m}{1+m} > 1$.

(5.) $\underset{x \doteq 0}{L}\ f(x, m x^{\mu}) = 2$, for $2 > \mu > 1$, m arbitrary.

(6.) $\underset{x \doteq 0}{L}\ f(x, m x^{\mu}) = 1$, for $0 < \mu < 1$, m "

(7.) $\underset{y \doteq 0}{L}\ \underset{x \doteq 0}{L}\ f(x,y) = 1.$

(8.) $\underset{x \doteq 0}{L}\ f(x, \bar{y}) = 1$, for constant $y \neq 0$.

(9.) $\underset{y \doteq 0}{L}\ f(\bar{x}, y) = 1$, " " $x \neq 0$.

The double limit at the origin does not exist.

<u>Example 16</u>:- Given the function

$$z = \frac{a(x+y)^4 + bx^2y + cxy^2}{a_1(x+y)^4 + b_1x^2y + c_1xy^2}\ ; \text{ where } f(0,0) = \frac{a}{a_1}$$

to test for continuity and for double limit at the origin.

This function is continuous at the point (0, 0) with respect to x alone and with respect to y alone.

$$\underset{x \doteq 0}{L}\ \underset{y \doteq 0}{L}\ \frac{a(x+y)^4 + bx^2y + cxy^2}{a_1(x+y)^4 + b_1x^2y + c_1xy^2} = \frac{a}{a_1} = f(0,0)$$

therefore it is continuous with respect to x alone.

$$\underset{y \doteq 0}{L}\ \underset{x \doteq 0}{L}\ f(x,y) = \frac{a}{a_1} = f(0,0)$$

therefore it is continuous with respect to y alone. Moreover we have

$$\underset{x \doteq 0}{L}\ f(x,\bar{y}) = \frac{a}{a_1}\ , \text{ for constant } y \neq 0,$$

$$\underset{y \doteq 0}{L}\ f(\bar{x},y) = \frac{a}{a_1}\ , \quad '' \quad '' \quad x \neq 0.$$

Still the double limit does not exist; for, let $y = mx$ and we get

$$\underset{x \doteq 0}{L}\ \frac{ax^4(1+m)^4 + bmx^3 + cm^2x^3}{a_1x^4(1+m)^4 + b_1mx^3 + c_1m^2x^3} = \frac{bm + cm^2}{b_1m + c_1m^2}$$

$$= \frac{b + cm}{b_1 + c_1m}$$

which differs from the twice taken limits and shows, by Prop. I, that the double limit does not exist.

<u>Example 17</u>:- Given the function

$$z = \frac{6(x+y)^4 + 2y^2(y-x) + 6y(y-x)^2}{3(x+y)^4 + 5y^2(y-x) + 3y(y-x)^2}\ ; \text{ where } f(0,0) = 2.$$

to test for double limit at the origin and for continuity.

If we let $y = x + mx^2$, then we have

$$\underset{x \doteq 0}{L} \frac{6(2x+mx^2)^4 + 2(x+mx^2)^2 mx^2 + 6(x+mx^2)m^2x^4}{3(2x+mx^2)^4 + 5(x+mx^2)^2 mx^2 + 3(x+mx^2)m^2x^4}$$

$$= \frac{6 \cdot 2^4 + 2m + 6m^2}{3 \cdot 2^4 + 5m + 3m^2}$$

Therefore the double limit does not exist, by Prop. I, since this may have different values for different values of m.

$$\underset{x \doteq 0}{L} \underset{y \doteq 0}{L} f(x,y) = 2 = f(0,0)$$

$$\underset{y \doteq 0}{L} \underset{x \doteq 0}{L} f(x,y) = \underset{y \doteq 0}{L} \frac{6y^4 + 2y^3 + 6y^3}{3y^4 + 5y^3 + 3y^3} = 1$$

Therefore it is continuous with respect to x alone, but not continuous with respect to y alone.

If we let $y = mx^2$, then we have

$$\underset{x \doteq 0}{L} \frac{6x^4(1+mx)^4 + 2m^2x^5(mx-1) + 6mx^4(mx-1)^2}{3x^4(1+mx)^4 + 5m^2x^5(mx-1) + 3mx^4(mx-1)^2}$$

$$= \frac{6-6m}{3-3m} = 2 = f(0,0)$$

Therefore it is continuous by approaches along curves $y = mx^2$, m arbitrary.

If we let $y = mx^\mu$, where μ lies between 2 and ∞, then we have

$$\underset{x \doteq 0}{L} \frac{6x^4(1+mx^{\mu-1})^4 + 2m^2x^{2\mu+1}(mx^{\mu-1}-1) + 6mx^{\mu+2}(mx^{\mu-1}-1)^2}{3x^4(1+mx^{\mu-1})^4 + 5m^2x^{2\mu+1}(mx^{\mu-1}-1) + 3mx^{\mu+2}(mx^{\mu-1}-1)^2}$$

$$= \frac{6}{3} = 2 = f(0,0)$$

Therefore it is continuous by approaches along curves $y = mx^{\mu}$, where $2 < \mu < \infty$.

<u>Example 18</u>:– Given the function

$$z = \frac{9x^7 + y^2(y - x^2) + 9y(y - x^2)^2}{3x^7 + 2y^2(y - x^2) + 3y(y - x^2)^2}$$

to test for the existance of the double limit at the origin.

Here we have a function in which we get the same limiting values by all approaches of form $y = mx^{\mu}$ except the linear and the quadratic approaches.

$$\underset{x \doteq 0}{L}\ \underset{y \doteq 0}{L}\ f(x, y) = \underset{x \doteq 0}{L}\ \frac{9x^7}{3x^7} = 3.$$

$$\underset{y \doteq 0}{L}\ \underset{x \doteq 0}{L}\ f(x, y) = \underset{y \doteq 0}{L}\ \frac{y^3 + 9y^3}{2y^3 + 3y^3} = 2.$$

Therefore the double limit does not exist at the origin, since the twice taken limits are not equal.

$$\underset{y \doteq 0}{L}\ f(\bar{x}, y) = 3, \text{ for constant } x \neq 0.$$

$$\underset{x \doteq 0}{L}\ f(x, \bar{y}) = 2, \quad " \qquad " \qquad y \neq 0.$$

If we put $y = mx$, then we have

$$\underset{x \doteq 0}{L}\ \frac{9x^7 + m^2x^3(m - x) + 9mx^3(m - x)^2}{3x^7 + 2m^2x^3(m - x) + 3mx^3(m - x)^2} = \frac{m^3 + 9m^3}{2m^3 + 3m^3} = 2$$

If we put $y = mx^2$, then we get

$$\underset{x \doteq 0}{L} \frac{9x^7 + m^2x^6(m-1) + 9mx^6(m-1)^2}{3x^7 + 2m^2x^6(m-1) + 3mx^6(m-1)^2} = \frac{m^2 + 9m(m-1)}{2m^2 + 3m(m-1)}$$

$$= \frac{10m - 9}{5m - 3}.$$

If we put $y = mx^\mu$ where $2 < \mu < \infty$, then we have

$$\underset{x \doteq 0}{L} \frac{9x^7 + m^2x^{2\mu+2}(mx^{\mu-2} - 1) + 9mx^{\mu+4}(mx^{\mu-2} - 1)^2}{3x^7 + 2m^2x^{2\mu+2}(mx^{\mu-2} - 1) + 3mx^{\mu+4}(mx^{\mu-2} - 1)^2}$$

$$= \frac{9 - 9m}{3 - 3m} = 3, \text{ for } \mu = 3$$

$$= \frac{9}{3} = 3 \quad , \text{ " } \mu = 4, 5, \ldots \infty.$$

Thus we see that by approaches to the origin along curves of form $y = mx^\mu$, we always get the limit 3, except for linear and quadratic approaches, i.e. except for $\mu = 1$, or 2.

<u>Example 19</u>:- Given the function

$$z = (x + y)\frac{y + (x+y)^2}{y - (x+y)^2}$$

to test for the existance of the double limit at the origin.

Here we have a function in which we get the limit 0 by all approaches to origin along curves of form $y = mx^\mu$, and still the double limit does not exist.

$$\lim_{x \doteq 0} \lim_{y \doteq 0} (x+y) \frac{y+(x+y)^2}{y-(x+y)^2} = 0.$$

$$\lim_{y \doteq 0} \lim_{x \doteq 0} f(x,y) = \lim_{y \doteq 0} y \frac{1+y}{1-y} = 0.$$

$$\lim_{x \doteq 0} f(x,\bar{y}) = \bar{y} \frac{1+\bar{y}}{1-\bar{y}}, \text{ for constant } y \neq 0.$$

$$\lim_{y \doteq 0} f(\bar{x},y) = -\bar{x}, \quad " \quad " \quad x \neq 0.$$

If we let $y = mx$, then we get

$$\lim_{x \doteq 0} x(1+m) \frac{mx + x^2(1+m)^2}{mx - x^2(1+m)^2} = 0.$$

If we let $y = mx^{\mu}$, where $0 < \mu < \infty$, we get

$$\lim_{x \doteq 0} x(1+mx^{\mu-1}) \frac{mx^{\mu-2} + (1+mx^{\mu-1})^2}{mx^{\mu-2} - (1+mx^{\mu-1})^2} = 0.$$

But if we let $y = x^2 + mx^3$, then we get

$$\lim_{x \doteq 0} (x+x^2+mx^3) \frac{(1+mx) + (1+x+mx^2)^2}{(1+mx) - (1+x+mx^2)^2}$$

$$= \lim_{x \doteq 0} (1+x+mx^2) \frac{(1+mx) + (1+x+mx^2)^2}{m-2+(1+2m)x^2+2mx^3+m^2x^4}$$

$$= \frac{1}{m-2}.$$

Since this has different values for different values of m, by Prop. I, the double limit does not exist.

<u>Example 20</u>:- Given the function

$$z = \frac{1}{x+y} \frac{y-(x+y)^2}{y+(x+y)^2}$$

to test for the existance of the double limit at the origin.

Here we have a function in which we get the limiting value ∞ by all approaches along curves of form $y = mx^{\mu}$, where $0 < \mu < \infty$.

$$\underset{x \doteq 0}{L}\ \underset{y \doteq 0}{L}\ \frac{1}{x+y}\ \frac{y-(x+y)^2}{y+(x+y)^2} = -\infty.$$

$$\underset{y \doteq 0}{L}\ \underset{x \doteq 0}{L}\ f(x,y) = \underset{y \doteq 0}{L}\ \frac{1}{y} \cdot \frac{1-y}{1+y} = \infty.$$

$$\underset{x \doteq 0}{L}\ \frac{1}{x+\bar{y}}\ \frac{\bar{y}-(x+\bar{y})^2}{\bar{y}+(x+\bar{y})^2} = \frac{1}{\bar{y}}\ \frac{1-\bar{y}}{1+\bar{y}}, \text{ for constant } y \neq 0$$

$$\underset{y \doteq 0}{L}\ f(\bar{x},y) = -\frac{1}{\bar{x}}, \text{ for constant } x \neq 0.$$

If we let $y = mx^{\mu}$, where $0 < \mu < \infty$, we get

$$\underset{x \doteq 0}{L}\ \frac{1}{x(1+mx^{\mu-1})}\ \frac{mx^{\mu-2}-(1+mx^{\mu-1})^2}{mx^{\mu-2}+(1+mx^{\mu-1})^2} = -\infty.$$

If we put $y = x^2 + mx^3$, we get

$$\underset{x \doteq 0}{L}\ \frac{1}{x+x^2+mx^3} \cdot \frac{x^2+mx^3-(x+x^2+mx^3)^2}{x^2+mx^3+(x+x^2+mx^3)^2}$$

$$= \underset{x \doteq 0}{L}\ \frac{1}{x(1+x+mx^2)}\ \frac{1+mx-(1+x+mx^2)^2}{1+mx+(1+x+mx^2)^2}$$

$$= \frac{1}{x(1+x+mx^2)}\ \frac{(m-2)x-(1+2m)x^2-(2mx^3+m^2x^4)}{1+mx+(1+x+mx^2)^2}$$

$$= \frac{m-2}{2}.$$

Therefore, by Prop I, the double limit does

not exist.

<u>Example 21</u>:- Given the function

$$z = x\,\frac{x+y}{x^2-y}$$

to test for the existance of the double limit at the origin.

In this function all the single limits exist but the double limit does not exist.

$$\underset{x \doteq 0}{L}\ \underset{y \doteq 0}{L}\ x\,\frac{x+y}{x^2-y} = 1.$$

$$\underset{y \doteq 0}{L}\ \underset{x \doteq 0}{L}\ f(x,y) = 0.$$

$$\underset{x \doteq 0}{L}\ f(x,\bar{y}) = 0, \text{ for constant } y \neq 0.$$

$$\underset{y \doteq 0}{L}\ f(\bar{x},y) = 1, \quad '' \quad '' \quad x \neq 0.$$

If we put $y = mx$, then we get

$$\underset{x \doteq 0}{L}\ x\,\frac{x+mx}{x^2-mx} = \underset{x \doteq 0}{L}\ \frac{1+m}{1-\frac{m}{x}} = 0.$$

If we put $y = mx^2$, then we get

$$\underset{x \doteq 0}{L}\ x\,\frac{x+mx^2}{x^2-mx^2} = \underset{x \doteq 0}{L}\ \frac{1+mx}{1-m} = \frac{1}{1-m}.$$

If we put $y = mx^{\mu}$, where $2 < \mu < \infty$, then we get

$$\underset{x \doteq 0}{L}\ x\,\frac{x+mx^{\mu}}{x^2-mx^{\mu}} = \underset{x \doteq 0}{L}\ \frac{1+mx^{\mu-1}}{1-mx^{\mu-2}} = 1.$$

Since the twice taken limits differ

we know the double limit does not exist by Prop. II.

<u>Example 22</u>:- Given the function

$$z = \log \frac{y}{x}$$

to test for the existance of the double limit at the origin.

Here we have

$$\underset{x \doteq 0}{L}\ \underset{y \doteq 0}{L} \log \frac{y}{x} = -\infty.$$

$$\underset{y \doteq 0}{L}\ \underset{x \doteq 0}{L} \log \frac{y}{x} = \infty.$$

$$\underset{x \doteq 0}{L} \log \frac{y}{x} = -\infty, \text{ for constant } y \neq 0.$$

$$\underset{y \doteq 0}{L} \log \frac{y}{x} = +\infty, \quad " \quad " \quad x \neq 0.$$

If we let $y = e^m x$, then we get

$$\underset{x \doteq 0}{L} \log \frac{e^m x}{x} = \log e^m = m.$$

Therefore the double limit does not exist by Prop. I.

<u>Example 23</u>:- Given the function

$$z = y \log x$$

to test for the existance of the double limit at the origin.

Here we have

$$\underset{x \doteq 0}{L}\ \underset{y \doteq 0}{L}\ y \log x = 0.$$

$$\underset{y \doteq 0}{L}\ \underset{x \doteq 0}{L}\ y \log x = -\infty.$$

Since these twice taken limits are not equal we know, by Prop. II, that the double limit at the origin does not exist.

We should notice that while

$$\underset{x \doteq 0}{L}\ x \log x = 0$$

yet the double limit

$$\underset{\substack{y \doteq 0 \\ x \doteq 0}}{L}\ y \log x \neq 0$$

and in fact does not exist at all.

Example 24:- Given the function

$$Z = a\, x^{\mu_1} y^{\mu_2}$$

to test for the existance of the double limit at the origin.

If the μ's are integral and positive we have here a general integral rational function of a single term.

If we put $y = x$, then we get

$$\underset{x \doteq 0}{L}\ a\, x^{\mu_1 + \mu_2} = 0.$$

Therefore 0 must be the value of the double limit if there be one. Substituting 0 in the defining relation,

(Chap. I §2.) we get

$$|a(0+\delta_1)^{\mu_1}(0+\delta_2)^{\mu_2} - 0| < \sigma$$

or

$$|a\,\delta_1^{\mu_1}\,\delta_2^{\mu_2}| < \sigma$$

which relation is satisfied. Therefore the double limit exists and is equal to 0. By Prop. VIII we know that the sum or difference of a finite number of such terms as above has the double limit 0. Therefore every integral rational function of x and y with finite number of terms has the double limit 0.